Finest Quality

Union Special®
INDUSTRIAL SEWING EQUIPMENT

STYLES

ADJUSTING INSTRUCTIONS AND ILLUSTRATED PARTS LIST

56300V
56300Y
56300AV

ADVANCED HIGH SPEED FIFTY THOUSAND SERIES MACHINES WITH BACK TACKING MECHANISM

CATALOG
NO. T129Y-GR

FIRST
EDITION

RoHS
2002/95/EC

From the library of: Diamond Needle Corp

FIRST EDITION
© 2006

PRINTED 2006 IN USA

INFORMATION SUBJECT TO CHANGE WITHOUT NOTICE

© UNION SPECIAL CORPORATION ALL RIGHTS RESERVED IN ALL COUNTRIES.

From the library of: Diamond Needle Corp

IDENTIFICATION OF MACHINES

Each UNION SPECIAL machine is identified by a Style number on a name plate on the machine. Style numbers are classified as standard and special. Standard Style numbers have one or more letters suffixed, but never contain the letter "Z". Example: "Style 56300 V". Special Style numbers contain the letter "Z". When only minor changes are made in a standard machine, a "Z" is suffixed to the standard Style number. Example: "Style 56300 VZ".

Styles of machines similar in construction are grouped under a class number which differs from the style number, in that it contains no letters. Example: "Class 56300".

APPLICATION OF CATALOG

This catalog is a supplement to Catalog No. 129 M, Fourth Edition and should be used in conjunction therewith. Only the parts found on Styles 56300 V, Y and AV, but not on Style 56300 W are illustrated. At the back is an illustration identifying the parts by reference number and on the following page, the part numbers and description identifies the part. Any part that is a component of another part is indicated by indenting its description under the description of the assembly or base part. Always use the part number in the second column, never use the reference number in the first column when ordering repair parts.

This catalog applies specifically to the Standard styles of machines as listed herein. It can also be applied with discretion to some Special machines in this Class. References to direction, such as right, left, front, back, etc., are given from the operator's position while seated at the machine. Operating direction of handwheel is toward the operator.

STYLES OF MACHINES IN CLASS 56300

Advanced High Speed Single Needle Flat Bed Machines, Medium and High Throw, Needle Bearing Needle Bar Drive, Light Weight Presser Bar and Needle Bar Driving Mechanism, Single Reservoir Enclosed Positive Automatic Lubricating System, Filtered Oil Return Pumps for Head and Base, Lateral Looper Travel, Large Handwheel and Improved Belt Guard, Prepared for Use with Knee Press for Presser Foot Lifter, Equipped with Disc Thread Tensions, Maximum Work Space to Right of Needle Bar 8 1/4 Inches (209.6 mm).

56300 V Medium throw machine with back-tacking mechanism, for seaming and/or hemming dresses, skirts, shirts, towels, sheets, curtains and for similar operations on light to medium weight woven materials where back tacking is required. Seam Spec. 401-SSa-1. Type 130 GHS needle. Maximum recommended speed 6500 R.P.M.

56300 Y Medium throw machine with back-tacking mechanism, for seaming pants, dresses, skirts, hemming shirts, towels, sheets, curtains and for similar operations on medium weight woven materials where back tacking is required. Seam Spec. 401-SSa-1. Type 130 GHS needle. Maximum recommended speed 6500 R.P.M.

56300 AV Medium throw machine with four motion retainer to prevent skipping at sharp turns of glove fingers. For closing cotton flannel gloves. Seam Spec. 401-SSa-1. Type 130 GHS needle. Maximum recommended speed 6500 R.P.M.

From the library of: Diamond Needle Corp

NEEDLES

Each UNION SPECIAL needle has both a type number and a size number. The type number denotes the kind of shank, point, length, groove, finish and other details. The size number, stamped on the needle shank, denotes the largest diameter of blade measured in thousandths of an inch, midway between the shank and the eye. Collectively, the type number and the size number is the complete symbol, which is given on the label of all needles packaged and sold by Union Special.

Standard recommended needle for the machines covered in this catalog is Type 130 GHS. It has a round shank, round point, short, double groove, struck groove, ball eye, spotted, government, short blade 1/8 inch (3.18 mm) less than standard, width of eye and groove undersize - one step reduction, ball point, chromium plated - sizes 080/032, 090/036, 100/040, 110/044, 125/049, 140/054.

To have needle orders promptly and accurately filled, and empty package, a sample needle, or the type and size number should be forwarded. Use description on label. A complete order would read: "1000 Needles, Type 130 GHS, Size 090/036".

Selection of the proper needle size should be determined by size of thread used. Thread should pass freely through needle eye in order to produce a good stitch formation.

USE GENUINE NEEDLES AND REPAIR PARTS

Success in the operation of these machines can be secured only with genuine UNION SPECIAL Needles and Repair Parts as furnished by the Union Special Corporation, its subsidiaries and authorized distributors. They are designed according to the most approved scientific principles, and are made with utmost precision. Maximum efficiency and durability are assured.

Genuine needles are packaged with labels marked *Union Special*®. Genuine repair parts are stamped with the Union Special trademark, U S Emblem. Each trademark is your guarantee of the highest quality in materials and workmanship.

IDENTIFYING PARTS

Where the construction permits, each part is stamped with its part number. Parts too small for a complete catalog stamping are identified by letter symbols which distinguish one part from another that is similar in appearance.

Part numbers represent the same part, regardless of catalog in which they appear.

IMPORTANT! ON ALL ORDERS, PLEASE INCLUDE PART NAME AND STYLE OF MACHINE FOR WHICH PART IS ORDERED.

TERMS

Prices are strictly net cash and are subject to change without notice. All shipments are forwarded f.o.b. shipping point. Parcel Post shipments are insured unless otherwise directed. A charge is made to cover postage and insurance.

From the library of: Diamond Needle Corp

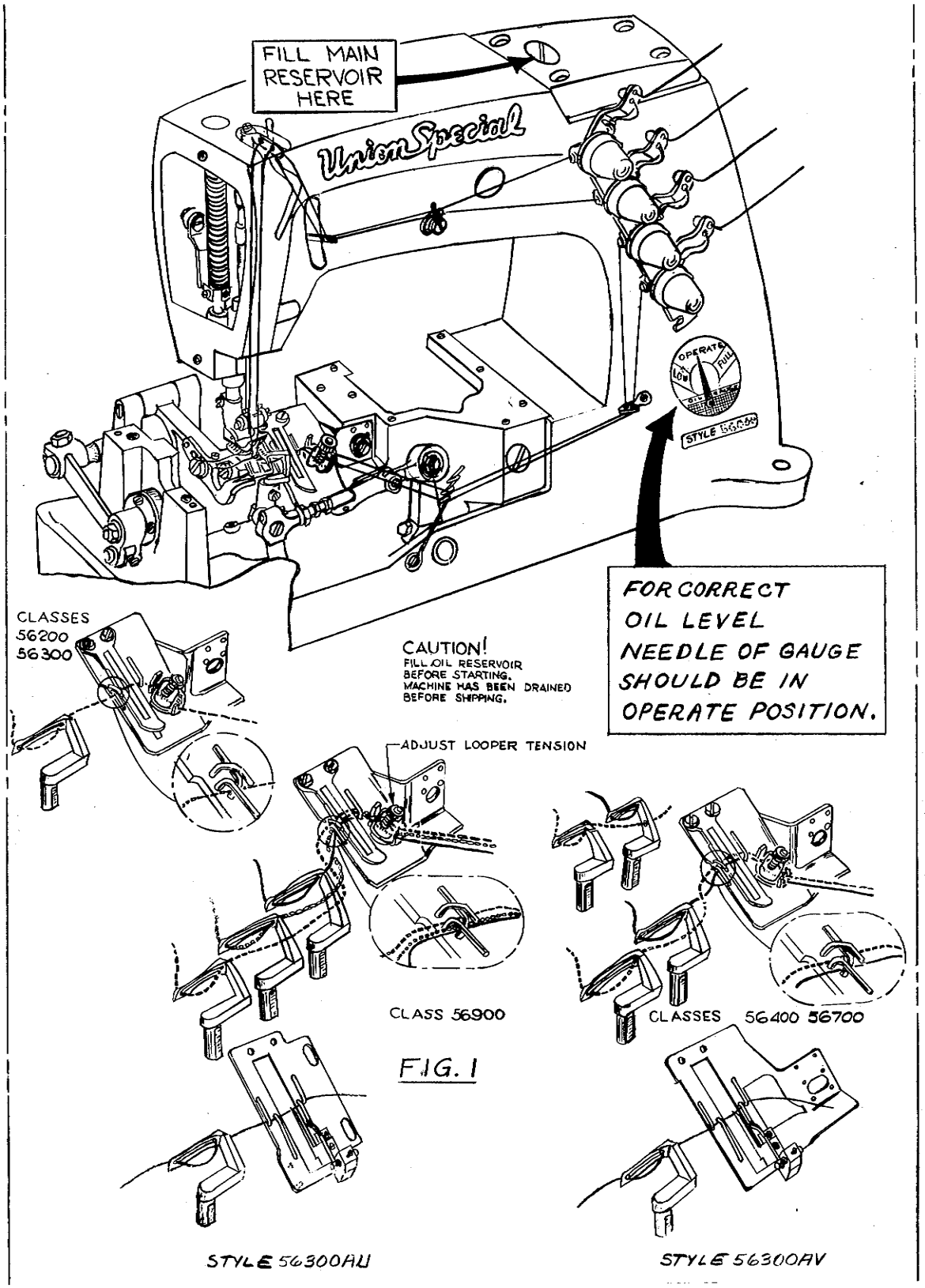

THREADING AND OILING DIAGRAM

While machine is in operation the needle of the oil gauge should be in the band marked "OPERATE". For further lubricating instructions refer to paragraph on "Lubrication", on page 6. Thread machine in accordance with the threading diagram above.

From the library of: Diamond Needle Corp

INSTRUCTIONS FOR MECHANICS

All of the adjusting instructions for Style 56300 W are applicable for Styles 56300 V, Y, and AV, except use Type 130 GHS needle in place of Type 128 GAS needle. The instructions that follow are required for Styles 56300 V, Y and AV.

LUBRICATION

CAUTION! Oil has been drained from the main reservoir before shipment, so the reservoir must be filled to the proper lever as indicated on oil gauge (A, Fig. 1 or B, Fig. 2) before beginning to operate. Run machine slowly for several minutes to distribute the oil to the various parts. Full speed operation can then be expected without damage.

RECOMMENDED OIL

Use a straight mineral oil of a Saybolt viscosity of 90 to 125 seconds at 100° Fahrenheit in the main reservoir. This is equivalent to Union Special specification No. 175. Fill main reservoir at plug screw in upper crank chamber cover (A, Fig. 2) and check oil level at gauge (B). Oil is at maximum safe operating level when needle is to the black line, located to the right of "OPERATE" zone, marked "FULL". Oil should be added when needle is to the black line, located to the left of "OPERATE" zone, marked "LOW". See paragraph under "Changing Stitch Length" in Catalog No. 129 M, Fourth Edition, for repacking feed rocker bearings.

CAUTION! It is important that these machines not be over filled.

It is recommended that a new machine, or one that has been out of service for an extended period be lubricated as follows: Remove the head cover, clean out lint and directly oil the needle bar link and the needle bar. Replace head cover as no further hand oiling will be required. Run machine slowly for several minutes to distribute oil to the various parts.

For machines in operation check the oil for lint deposits at reasonable intervals. If dirty, change the oil. An oil change is recommended every 2000 operating hours. Oil may be drained from main reservoir by removing plug screw (C, Fig. 2) located below the cloth plate at front of the machine, or by removing the lower crank chamber cover, located at the back of machine.

NOTE: Looper avoid and feed lift eccentrics receive oil thru the mainshaft, so when assembling be sure oil holes in the eccentric line up with oil holes in mainshaft when spot screw is in time spot.

OIL GAUGE

The oil gauge is set at the factory to show the proper oil level in the reservoir. Should an adjustment become necessary, however, the following steps should be followed:

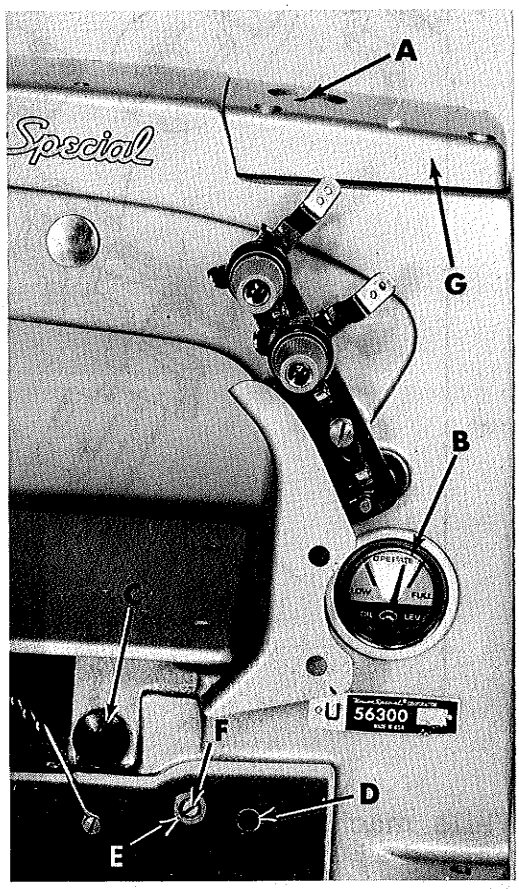

Fig. 2

From the library of: Diamond Needle Corp

OIL GAUGE (Continued)

1. Place the machine upright on a level table or bench.

2. Remove the oil reservoir plug screw (C, Fig. 2) and tip machine forward to drain oil from the reservoir.

3. Make sure all oil is drained from main reservoir.

4. Remove lower crank chamber cover, located at the back of the machine.

5. Fill main reservoir to a level even with the bottom contour of the knee press shaft bushing (D, Fig. 2).

6. Loosen lock nut (E) on calibrating screw (F), and turn the screw to the left or right until the gauge needle rests on the black line, located to the left of "OPERATE" zone, marked "LOW".

7. Tighten lock nut (E) and replace plug screw (C) and lower crank chamber cover.

8. Add oil so that gauge needle rests on the black line, located to the right of "OPERATE: zone, marked "FULL".

SETTING THE FRONT NEEDLE GUARD

Set the front needle guard (A, Fig. 16) so that its guarding surface barely contacts the needle (B) as the point of the looper (C) comes up to the needle. It should be set as high as possible without any interference from the looper. The top of the guard should be set no higher than even with the underside of the looper, yet not interfere with the needle thread.This can be accomplished by loosening screws (D) which will permit raising, lowering or rotating the guard around its shank as required, retighten screws. Should forward or rearward repositioning of the needle guard become necessary, loosen screws (E) which will permit rotation of the needle guard holder (F) around its shaft as required, retighten screws.

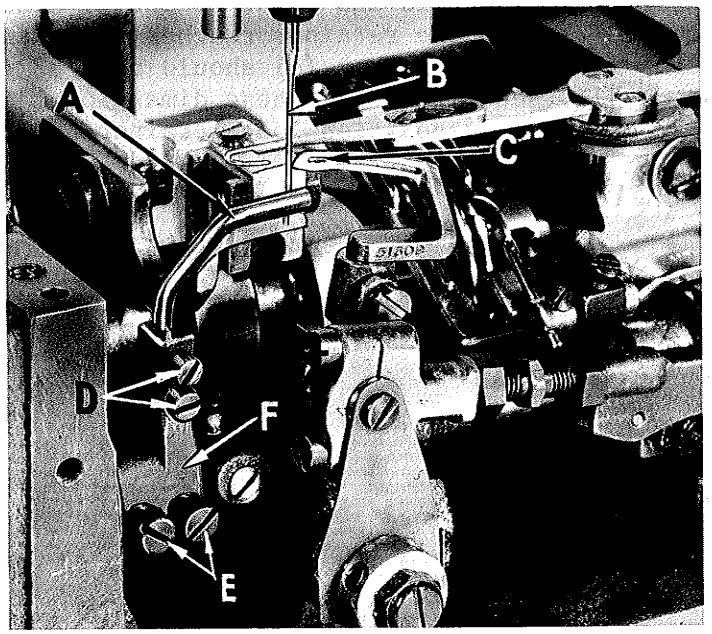

Fig. 16

From the library of: Diamond Needle Corp

TIMING THE RETAINER

With the cloth plate removed and the needle bar at the bottom of its stroke, the timing mark on the face of the vertical drive crank (A, Fig. 17) must line up with the timing mark on the oil reservoir top cover (B). This can be accomplished by removing the access plug screw (C), insert screwdriver and loosen screws in the driven gear on the vertical drive crank, rotate vertical drive crank by hand to align the timing marks. Retighten screws in driven gear securely and replace plug screw (C).

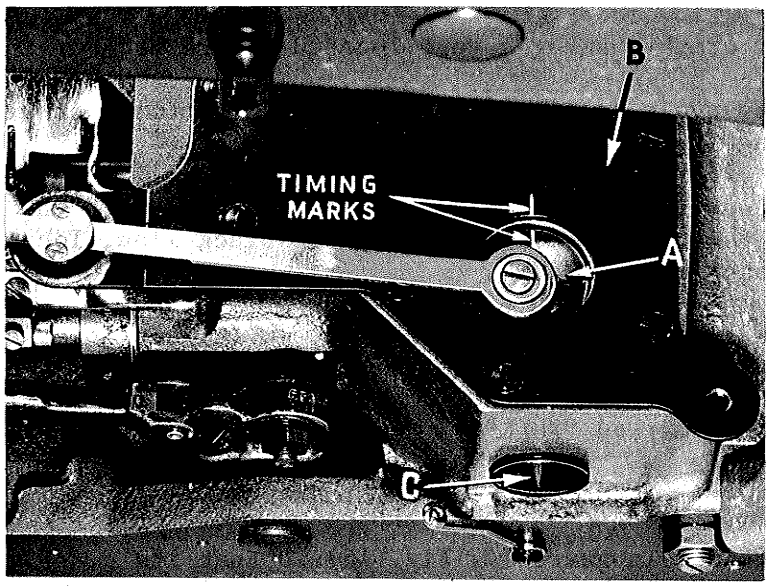

Fig. 17

SETTING THE RETAINER

As the retainer (A, Fig. 18) passes behind the needle (B), going from right to left, and the point of the retainer hook reaches the right side of the needle, the distance between the back of the needle and point of the retainer should be 1/32 inch (.79 mm) (See Fig. 18). When the retainer reaches the extreme left end of its travel, the point of the loop retainer hook (A) should be 5/32 inch (3.97 mm) from the centerline of the needle (See Fig. 19). These dimensional settings can be made by loosening screws (B, Fig. 19), reposition loop retainer hook (A) as required and retighten screws (B).

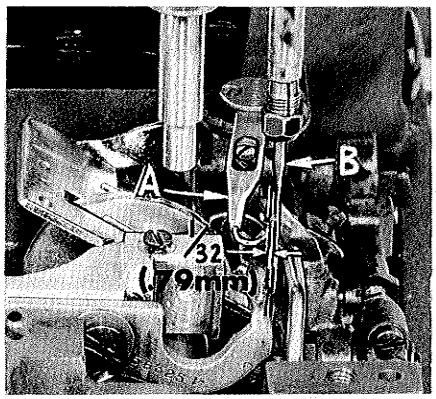

Fig. 18

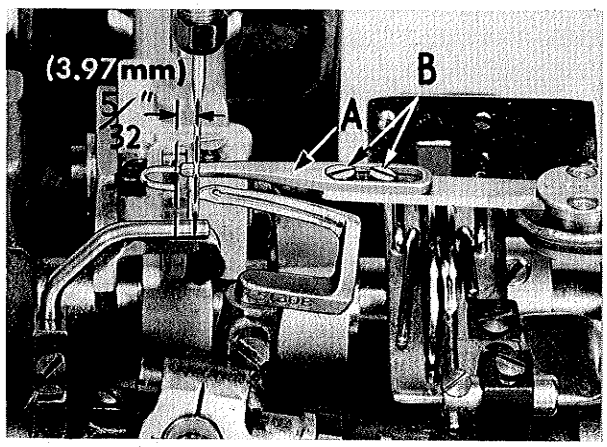

Fig. 19

From the library of: Diamond Needle Corp

THIS PLANOGRAPH SHOWS
THE ASSEMBLY OF 21660N
KNEE PRESS PARTS

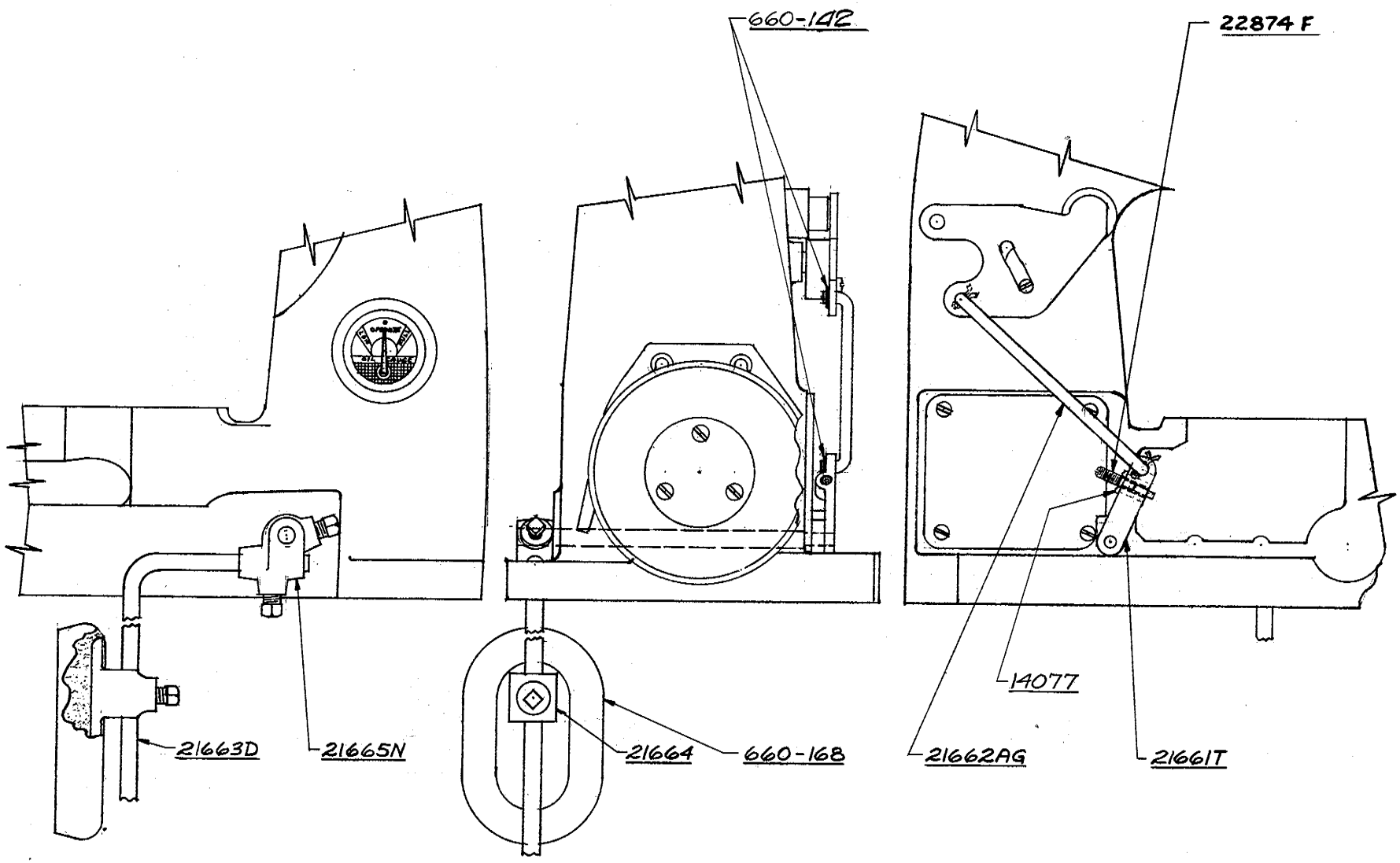

From the library of: Diamond Needle Corp

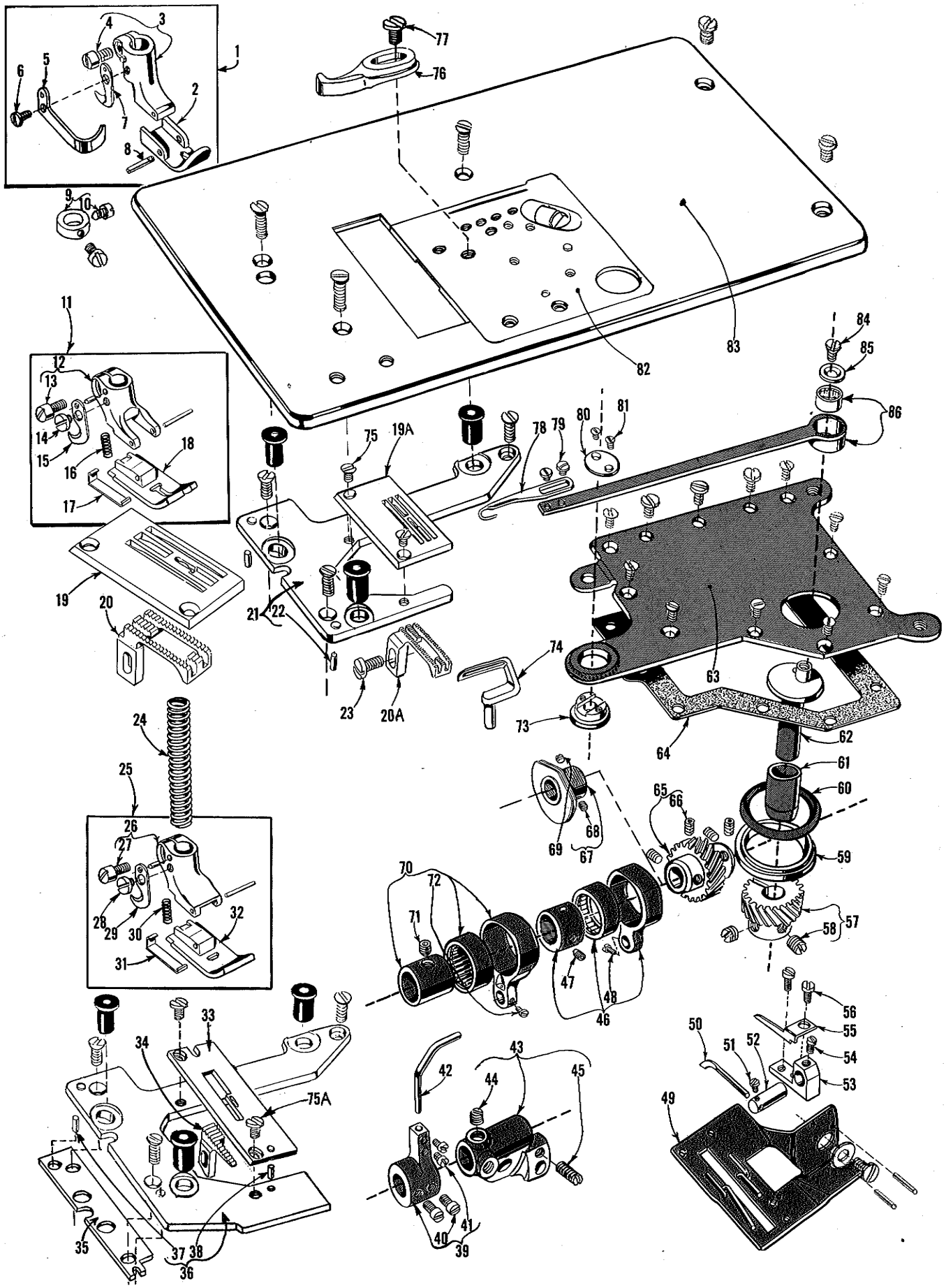

From the library of: Diamond Needle Corp

The parts illustrated on pages 10 and 12, and described on this page and page 13, represent the parts that are used on Styles 56300 V, Y and AV, but not used on Style 56300 W.

Unless otherwise specified in the description, the parts are used on all the machine styles covered in this catalog. The parts shown in phantom views and bearing no reference numbers are common to Styles 56300 V, W, Y and AV.

Use Catalog No. 129 M, Fourth Edition (Style 56300 W) for all parts not illustrated or described in this catalog.

Reference numbers that are inside a bracket or box on the picture plate and have indented descriptions, indicate they are component parts of a complete part or assembly.

SEWING PART COMBINATIONS, TAKE-UP, CAST-OFF PLATE AND BACK TACKING MECHANISM

Ref. No.	Part No.	Description	Amt. Req.
1	43220 D	Presser Foot, for Style 56300 AV	1
2	43230 D	Presser Foot Bottom	1
3	43230	Presser Foot Shank	1
4	91	Screw	1
5	43230 B	Finger Guard	1
6	605	Screw	1
7	1741 B	Chain Cutting Knife	1
8	22799 G	Screw	1
9	52888 B	Presser Bar Stop Collar, for Style 56300 AV	1
10	22562	Screw	2
11	51320 M	Presser Foot, for Style 56300 Y	1
12	51330 AJ	Presser Foot Shank	1
13	91	Screw	1
14	187 B	Screw	1
15	1741 B	Chain Cutting Knife	1
16	51330 W	Spring	1
17	51330 AH	Yielding Section	1
18	51330 AG	Presser Foot Bottom	1
19	56324 B	Throat Plate, for Style 56300 Y	1
19A	56324 A	Throat Plate, for Style 56300 V	1
20	56305 B	Feed Dog, 16 teeth per inch, for Style 56300 Y	1
20A	56305 A	Feed Dog, 22 teeth per inch, for Style 56300 V	1
21	56380	Throat Plate Support, for Styles 56300 V and Y	1
22	51280 J	Dowel Pin	2
23	22528	Screw, for feed dog	1
24	51256 C	Presser Spring	1
25	51320 N	Presser Foot, for Style 56300 V	1
26	51330 AK	Presser Foot Shank	1
27	91	Screw	1
28	187 B	Screw	1
29	1741 B	Chain Cutting Knife	1
30	51330 W	Spring	1
31	51330 AM	Yielding Section	1
32	51330 AL	Presser Foot Bottom	1
33	51224 W	Throat Plate, for Style 56300 AV	1
34 to 86		See following page	

From the library of: Diamond Needle Corp

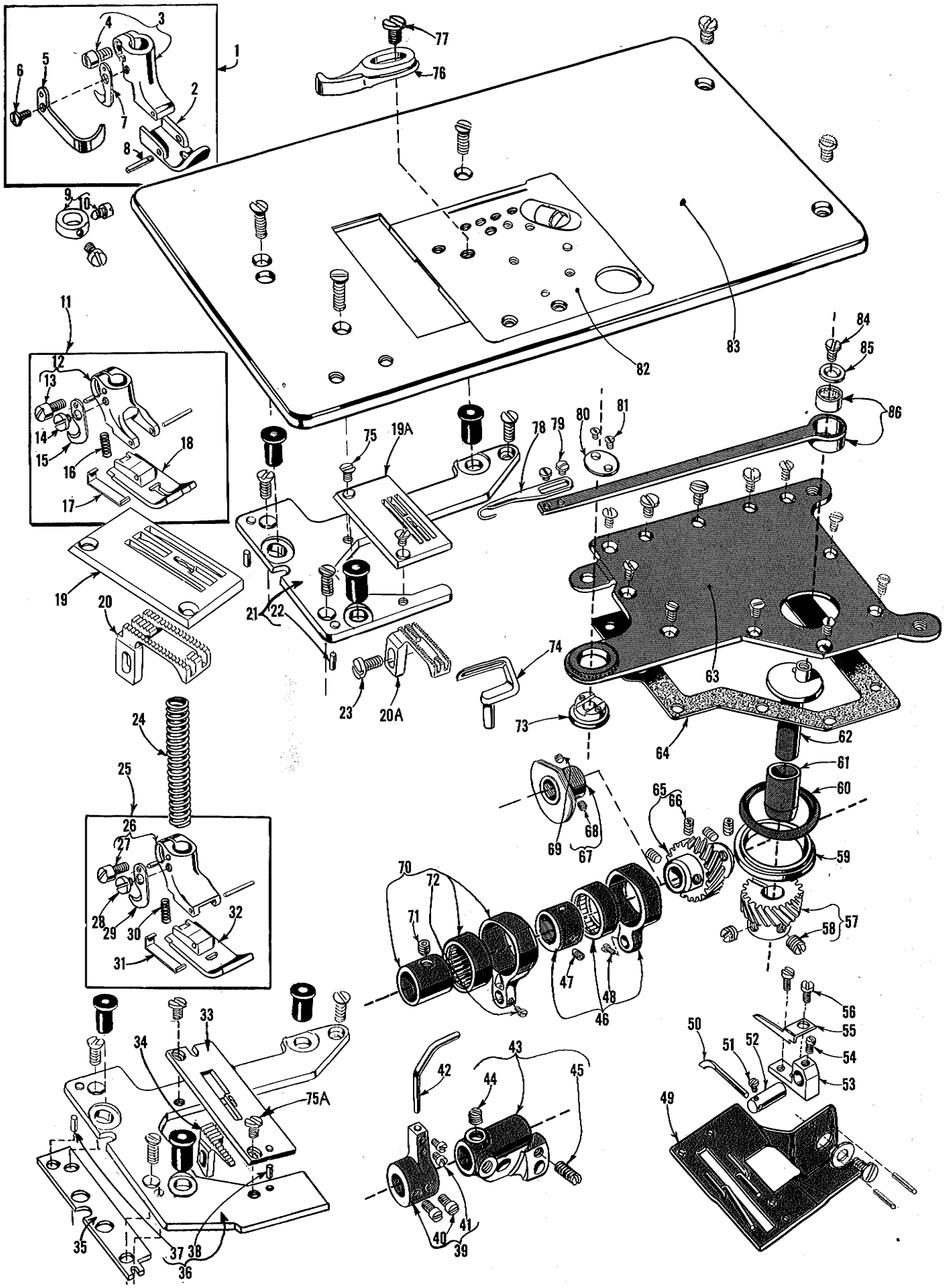

From the library of: Diamond Needle Corp

SEWING PART COMBINATIONS, TAKE-UP, CAST-OFF PLATE AND BACK TACKING MECHANISM

Ref. No.	Part No.	Description	Amt. Req.
1 to 33		See preceding page	
34	51205 W	Feed Dog, 12 teeth per inch, for Style 56300 AV	1
35	59480 C	Throat Plate Support Shim, for Style 56300 AV	1
36	56480	Throat Plate Support, for Style 56300 AV	1
37	51280 J	Dowel Pin	2
38	51280 K	Dowel Pin	2
39	52825 D	Looper Needle Guard Holder	1
40	33174 B	Screw	2
41	22563	Screw	2
42	51325	Looper Needle Guard	1
43	57744 A	Looper Rocker Frame	1
44	98	Set Screw	1
45	719	Stop Screw	1
46	29476 NM-062	Looper Avoid Eccentric Assembly, .062 inch (1.57 mm) throw, for Style 56300 V	1
-	29476 NM-072	Looper Avoid Eccentric Assembly, .072 inch (1.83 mm) throw, for Styles 56300 Y and AV	1
47	22894 AA	Screw	1
48	77	Screw, for link pin	1
49	51357 A	Cast-off Support Plate	1
50	51204	Retainer	1
51	22798 A	Screw, for retainer	1
52	51204 A	Retainer Finger Holder	1
53	51204 C	Cast-off Support	1
54	77	Screw, for retainer finger holder	1
55	51204 B	Cast-off	1
56	J87 J	Screw, for cast-off and cast-off support	2
57	56351 C	Loop Retainer Driven Gear	1
58	22580 E	Screw	2
59	643-341 Blk.	"O" Ring Holder	1
60	660-337	"O" Ring	1
61	56351 G	Drive Crank Bushing	1
62	56351 D	Loop Retainer Driving Crank	1
63	56382 R	Oil Reservoir Top Cover, for Styles 56300 V and Y	1
-	56382 RA	Oil Reservoir Top Cover, for Style 56300 AV	1
64	56382 H	Oil Reservoir Top Cover Gasket	1
65	53151	Loop Retainer Drive Gear and Main Shaft Coupling	1
66	22894 X	Set Screw	4
67	51423 C	Take-up	1
68	22580 D	Set Screw	1
69	22764 C	Spot Screw, for take-up	1
70	29476 NM-072	Feed Lift Eccentric Assembly, .072 inch (1.83 mm) throw	1
71	22894 AA	Screw	1
72	77	Screw, for link pin	1
73	56351 F	Fulcrum Bearing	1
74	51308	Looper	1
75	87	Screw, for throat plate, for Styles 56300 V and Y	2
75 A	22570	Screw, for throat plate, for Style 56300 AV	2
76	43203 D	Edge Guide, for Style 56300 AV	1
77	25 S	Screw, for edge guide	1
78	56351 B	Loop Retainer Hook	1
79	22798	Screw, for loop retainer hook	2
80	56351 E	Fulcrum Bearing Cover	1
81	22716 D	Screw, for fulcrum bearing cover	2
82	56381 B-222	Cloth Plate Cover, for Styles 56300 V and Y	1
-	56381 E-207	Cloth Plate Cover, for Style 56300 AV	1
83	56301 B	Cloth Plate, for Styles 56300 V and Y	1
-	56401	Cloth Plate, for Style 56300 AV	1
84	22574 D	Retainer Drive Washer Screw	1
85	59451 F	Retainer Drive Washer	1
86	56351 A	Hook Drive Arm	1

From the library of: Diamond Needle Corp

NOTES

From the library of: Diamond Needle Corp

Tools & Gauges

Description	Order Number
KITS:	
Floor Mechanics Tool Kit includes TTC Nos. 4, 5, 10-13, 15-20, 22, 23, 27, 28, 30, 33, 35, 36, 37-42, 48, 57, 58, 72, 73	TTC-1
Traveling Mechanics Tool Kit same as TTC-1 plus Nos. 7, 43, 44, 49-56	TTC-2
ALLEN WRENCHES:	
Screwdriver handle and 4 Allen Bits Sizes 3/32", 1/8", 5/32", 3/16"	TTC-4
Set Standard 'L' shape Allen Wrenches	TTC-57
Set Metric 'L' shape Allen Wrenches	TTC-8
Allen Cluster	TTC-62
BAGS:	
Union Special Tool Pouch	TTC-30
BRASS ROD:	
4 x 5/16"	TTC-19
BRUSH:	
Cleaning brush 6"	TTC-23
BUCKLE:	
Union Special metal belt buckle	TTC-31
CLAMP:	
C-Clamp 6"	TTC-53
CUTTER:	
Side cutters 5"	TTC-50
EMBLEMS:	
TTC emblem for coat	TTC-64
FILES:	
Round 8"	TTC-55
Flat 8"	TTC-56
Handles for files (not shown)	TTC-77
Diamond file for lockstitch needle guards	TTC-60
FLASHLIGHT:	
Pocket flashlight with clip	TTC-76
GAUGES:	
Feeler or thickness gauge, .001 thru .015	TTC-22
Looper Gauges set of 10 sizes: 1/16", 3/32", 3/64", 1/8", 9/64", 5/32", 3/16", 7/32", 1/4", 5/16"	TTC-33
Synchronizing gauge for flatbed machines (not shown)	TTC-34
4 1/8" gauge for flatbed machines (not shown)	TTC-35
Needle height gauge for 39800 machines	TTC-61
Spreader height gauge for 52800, 52900, 57800 and 57900 machines (not shown)	TTC-68
GRINDER:	
Handee grinder kit	TTC-74
HAMMER:	
4 oz. ball peen hammer	TTC-38
MAGNET:	
Pocket magnet 8"	TTC-10
PLIERS:	
Slip joint pliers 6"	TTC-12
Needle nose pliers 6" (serrated jaws)	TTC-13
Needle nose pliers 6" (smooth jaw)	TTC-49
Plastic grips for pliers	TTC-14
Snap ring pliers	TTC-69
Grooved pliers HL-14P	TTC-84
PUNCH:	
Center punch 4"	TTC-54
Drift punch	TTC-82
SANDING CLOTH:	
Emery cloth (not shown)	TTC-78
Crocus cloth (not shown)	TTC-79
Roll emery cord (not shown)	TTC-80

Description	Order Number
SCALE:	
Metal scale 1/2" x 6"	TTC-15
Metal scale 1/2" x 6", inches and metric	TTC-86
Metal scale 1/4" x 6"	TTC-66
SCISSORS:	
8"	TTC-32
SCREWDRIVERS:	
Set various size wood handled screwdrivers: 4", 10", 2-8", 6", 14", 12"	TTC-5
10" x 3/16" blade	TTC-24
8" x 3/16" blade, plastic handle Stanley	TTC-73
6" x 3/16" blade	TTC-25
3" x 3/16" blade	TTC-26
2" x 1/8" blade	TTC-27
8" x 1/8" blade	TTC-28
Quickwedge screw starter 5"	TTC-11
Quickwedge screw starter 3"	TTC-65
SOCKETS:	
T-Handle, 6" extension 9/32", 5/16", 3/8" and 1/2" sockets all 1/4" drive	TTC-37
1/2" socket, 1/4" drive	TTC-46
5/16" socket, 1/4" drive	TTC-47
Screwdriver handle for sockets 1/4" orive	TTC-48
T-Handle 1/4" drive	TTC-63
STONES:	
Triangle India Stone 4"	TTC-20
Round India Stone 4"	TTC-21
TACHOMETER:	
Handheld digital tach 1-20,000 RPM	TTC-67
TEST LEADS:	
Red Pomona type clip	TTC-70
Black Pomona type clip	TTC-71
TIMING LIGHT:	
Strobe light	TTC-75
TWEEZERS:	
Sharp point	TTC-16
VISE GRIPS:	
Small 7"	TTC-51
Large 10"	TTC-52
VOLT-OHM METERS:	
Pocket VOM Multitester	TTC-6
Large VOM Multitester	TTC-7
Case—small (not shown)	TTC-8
Case—large (not shown)	TTC-9
WRENCHES:	
Needle wrench 9/32" open end, curved for needle and looper nuts	TTC-17
Looper avoid wrench for classes 35800 and 36200. (not shown)	TTC-85
9/32" x 1/4" curved box end	TTC-18
1/2" open and box end	TTC-39
3/8" open and box end	TTC-40
5/16" open and box end	TTC-41
1/4" open and box end	TTC-81
7/16" open and box end	TTC-42
5/8" x 9/16" open end	TTC-43
11/16" x 3/4" open end	TTC-44
3/16" x 7/32" open end	TTC-45
1/4" x 7/32" open end	TTC-72
6" adjustable	TTC-36
8" adjustable	TTC-59
Adjustable torque wrench 0-75 in. lb. dial indicator with screwdriver bit & 1/4" drive adapter	TTC-3
Rod wrench for use with above torque wrench on flatbed machines	TTC-29
Adjustable torque wrench 0-36 in. lb. with bits	TTC-83

From the library of: Diamond Needle Corp

Union Special Corporation
Corporate Office
One Union Special Plaza
Huntley, IL 60142
Phone: 847•669•5101
Fax: 847•669•4454

Union Special GmbH
European Distribution Center
Raiffeisenstrasse 3
D-71696 Möglingen, Germany
Tel: 49•07141•247•0
Fax: 49•07141•247•100

JUKI CORPORATION
INTERNATIONAL SALES DIVISION
8-2-1, KOKURYO - CHO,
CHOFU-SHI, TOKYO 182, JAPAN
PHONE: 03(3430)4001~5
FAX: 03(3430)4909 . 4914 . 4984

Finest Quality

Union Special®
INDUSTRIAL SEWING EQUIPMENT

From the library of: Diamond Needle Corp